Final Report

Techno-Economic and Life-Cycle Assessment of the Carbon Negative Bio-oil Co-fire Fuel Power Production Strategy

Funded by the Iowa Energy Center (IEC)

Principal Investigators:
Lysle Whitmer
Ryan Smith
David Laird
Jill Euken
Mark Wright
Robert Brown

Project Period: July 2013 to December 2013

Table of Contents

Introduction

An important component of renewable energy policy in the United States is the reduction of carbon emissions in energy production. It is possible to reach net carbon emission of bioenergy production to zero or negative if some amounts of carbon can be sequestered as solid carbon rather than returned to atmosphere. This project proposed an innovative strategy to reducing carbon emissions via the sequestration of biochar, and the displacement of fossil fuel in electricity via the use of bio-oil co-fire fuel (BCF).

Biochar, a solid carbon generated from the thermal treatment of biomass, can be sequestered in soil for hundreds of years. It is in effect an efficient carbon sequestration agent that requires minimal energy input relative to alternatives in the power industry. Biochar sequestration yields additional benefits to Iowa soils by reducing nutrient leaching, recycling plant nutrients, increasing water holding ability, and reducing soil bulk density.

To achieve the goal of carbon negative emission energy, Iowa State University started a project called "Develop Carbon Negative Energy at ISU" based on the pyrolysis of biomass and production of bio-oil co-firing fuel (BCF), which is a mixture of 30%"heavy ends" of bio-oil and 70% crushed coal. BCF has been proved to have almost the same heating value as coal through large-scale experiments. Previous analysis indicated that its combustion results in much lower greenhouse gases (GHG) emissions compared to fossil fuel alternatives showing its potential of replacing coal in large-scale coal boilers.

BCF plant-gate costs are higher than coal by virtue of higher feedstock and additional processing requirements. However, this is mitigated in part by the by-products of producing BCF. There are three main products of pyrolysis of biomass: non-condensable gases (NCG), biochar and bio-oil. NCG which consists of about 21 wt. % of the products, provides heat for the pyrolysis reactor; biochar contributes 26 wt. % of the products and can be sequestered

in soil to improve the quality of the soil; bio-oil light ends (29 wt. % yield) is a precursor to value chemicals; and 24 wt% yield of bio-oil can be mixed at a 30/70 ratio with crushed coal to form BCF, which could be used in co-firing boilers at ISU.

Given its high heating value and lower greenhouse gases (GHG) emissions, bio-oil co-firing fuel has significant potential to reduce the consumption of coal in power generation systems and the power sector GHG. This project investigates the economic cost and the environmental impact of generating electricity from BCF using fast pyrolysis and a conventional combined heat and power (CHP) system.

The results of this study are based on techno-economic analysis (TEA) and life cycle analysis (LCA) to estimate the market viability and environmental impact of a baseline BCF system. The TEA provides capital, operating costs estimates, and the minimum electricity-selling price (MESP) for the process to be commercially viable. The LCA results indicate the net GHG emissions generated for a unit of power generated. These results are a starting point for understanding the economic challenge of BCF commercialization, and the incentive levels required to support this system.

Several studies have validated the use of TEA to evaluate the market potential and viability of biofuels. The results of TEA are an important part of the assessment criteria for commercial investment and market policy. This study employs standard TEA methodos to calculate capital cost and operating cost for a 2000 Mg per day of corn stover fast pyrolysis facility and a steam boiler consuming 1467 Mg per day of bituminous coal (30/70 BCF to coal ratio). A comparison of the MESP to the average market electricity price in the United States could help understand the commercial potential of BCF.

LCA has also been validated by its wide use in assessing the environmental impact of numerous commercial products and energy systems. It has a clear role in improving process efficiency and decision-making in energy policy. This study estimates energy use and greenhouse gas emissions for the whole BCF system, which is modeled as five steps (corn stover collection, transportation, pyrolysis, coal co-firing and electricity transmission and distribution). This report provides comparisons between the BCF system and two conventional systems: biomass-only and coal-only power generation to determine the relative environmental benefits of BCF fuel.

Methodology

This project employs chemical process design, techno-economic analysis (TEA), and life cycle assessment (LCA) to determine the economic cost and environmental impact of generating electricity from corn stover and coal via fast pyrolysis and combined heat and power systems. The chemical process design provides mass and energy balances of the major operating units and process modeled in this system. The TEA estimates the minimum electricity-selling price (MESP) for the facility based on its capital and operating costs. The LCA estimates the greenhouse gas emissions generated by this activity. Finally, we employ the results of this analysis to arrive at an incentive value for reducing coal electricity emissions via co-firing with bio-oil co-fire fuel.

Process Design

The overall process design consists of a fast pyrolysis unit coupled with a combined heat and power (CHP) generation unit. The major processing steps are shown in Figure 1. The system processing steps consist of pretreatment (chopping, drying, and grinding), pyrolysis gas cleanup and bio-oil recovery, storage, heat recovery and steam generation, and CHP.

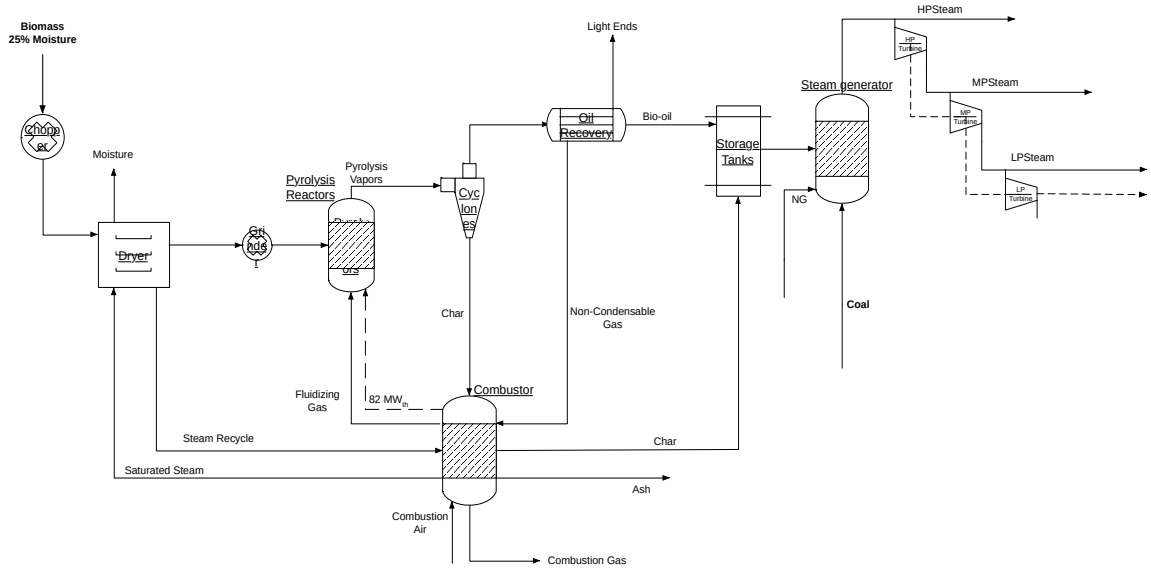

Figure 1 Simplified process flow diagram of corn stover fast pyrolysis and bio-oil co-fire fuel (BCF) and coal combined heat and power system

Biomass pretreatment includes chopping of the as-received stover to a screen size of 10 mm to improve its drying efficiency followed by grinding to 3 mm particle size. Drying takes place in a steam-blown drier operating at 120 °C designed to reduce the stover moisture content from 25% to 10%. The final feedstock properties (3 mm and 10% moisture) have been determined suitable for fast pyrolysis in a fluid bed reactor.

Fast pyrolysis takes place in a fluid bed reactor with operating conditions of 1 atm and 500 °C. Fluidization is accomplished by recycling flue gases from the combustion reactor at a 1.7 kg of gas to kg of feedstock input ratio. This study assumes that there are 4 fluid bed reactors operating in parallel. Heat input for the endothermic fast pyrolysis reactions is provided by indirect heat generated through pyrolysis gas and char combustion in the heat recovery and steam generation (HRSG) section. The fluid bed reactor yields pyrolysis vapors with entrained solids (biochar). Table 1 shows reported products yields of corn stover fast pyrolysis from various sources.

Table 1 Overall corn stover fast pyrolysis product yield comparison

Material Yields (wt. % dry basis)	NREL	NREL	USDA [a]
Non-Condensable Gas	14.3	11.7	21.9
Bio-oil	57.6	55.0	61.6[b]
Water	4.9	7.9	-
Biochar/Ash	19.4	19.5	17
Total	**96.2**	**94.1**	**100**

[a]Data employed by this study; [b]Includes water;

The facility employs cyclones to separate the solids from the vapor stream. Custom heat-exchanger units condense bio-oil from the pyrolysis vapors, and the remaining non-condensable gases (NCG) are sent to the HRSG section. The condensed bio-oil is later separated into heavy and light end phases.

Bio-oil contains hundreds of distinct organic compounds many of which have been identified in our laboratories. However, it remains difficult to model the quantities of these products. Therefore, the model employs representative compounds to account for the different compound groups in bio-oil. Table 2 shows the composition of pyrolysis products that serves as a basis for the model. These values are adjusted to improve the mole balance of the pyrolysis reactor.

Table 2 Pyrolysis product composition

Gas Compounds	Composition (kg/100 kg of dry biomass)
Carbon Dioxide	5.42
Carbon Monoxide	6.56
Methane	0.035
Ethane	0.142
Hydrogen	0.588[a]
Propane	0.152
Ammonia	0.0121
Bio-Oil Compounds	
Acetic Acid	5.93
Propionic Acid	7.31

Methoxyphenol	0.61
Ethylphenol	3.80
Formic Acid	3.41
Propyl-Benzoate	16.36
Phenol	0.46
Toluene	2.27
Furfural	18.98
Benzene	0.77
Other Compounds	
Water	10.80
Char/Ash	16.39

[a]Adjusted to 0.02 kg/kg of biomass based on engineering judgement.

The HRSG system provides heat and steam to the pyrolysis facility. The recovered heat provides energy for the endothermic pyrolysis reactor. Corn stover fast pyrolysis operates with a low energy input requirement and under pressurized conditions can operate exothermically. However, exothermic conditions are associated with higher biochar output and lower quality bio-oil yields. The primary use of the HRSG steam is to provide energy for feedstock drying. For this purpose, the HRSG raises low-pressure steam at 120 °C from the combustion of all non-condensable gases and a fraction of the biochar.

The primary purpose of this process is to generate steam and electricity from corn stover and coal. A secondary purpose of this design is to recover high value-added products from corn stover including biochar and bio-oil light ends. The overall outcome is the generation of electricity at a lower environmental impact than using coal alone with a competitive economic cost.

The final processing step is the CHP sub-system. The CHP employs both bio-oil co-fire fuel (BCF) and coal as input energy. The CHP boiler yields combustion gas at 1200 °C. The combustion gas passes through a series of heat exchangers to raise high-, medium-, and low-pressure steam. An economizer preheats water using excess heat from the boiler. A three-stage steam turbine system generates electricity for export at about 72% efficiency.

Feedstock Properties

Corn stover is used as the biomass of this analysis. Corn stover is modeled on a proximate and ultimate analysis basis. This process feedstock is modeled using information from Table 1. In summary, the modeled corn stover has a carbon content of 48.7 wt. % on a dry basis and negligible amounts of sulfur, which is relevant for the energy and environmental impact analysis. Biochar contains 75.7 wt. % carbon and the majority of inorganic metals required for agronomic applications. Coal is a bituminous coal with 63.7 wt. % carbon content and 2.51 wt.% sulfur.

Table 3 Corn stover, biochar, and bituminous coal ultimate and proximate analyses

Ultimate Analysis (dry basis)			
	Corn Stover	**Biochar**	**Bituminous Coal**
	Value (wt. %)	**Value (wt. %)**	**Value (wt. %)**
Ash	0.39	4.3	0.097
Carbon	48.7	75.7	0.6375
Hydrogen	6.8	4.2	0.045
Nitrogen	0.072	0.3	0.0125
Chlorine	0	0	0.0029
Sulfur	0.002	0.01	0.0251
Oxygen	44.036	15.49	0.0688
Proximate Analysis (wet basis)			
	Value (wt. %)	**Value (wt. %)**	**Value (wt. %)**
Moisture	25	3.7	0.1112
Fixed Carbon	12.56	64.9	0.4419
Volatile Matter	81.9	27.1	0.3499
Ash	1.68	4.3	0.097

Techno-Economic Analysis

The techno-economic analysis evaluates a preliminary design for the production and co-firing of bio-oil heavy ends with coal in a combined heat and power facility. This analysis requires estimates of the capital and operating costs in order to determine the minimum

electricity-selling price (MESP). These estimates depend on some general assumptions regarding the facility operation and its costs.

In this study, the base case scenario assumes that the facility is an nth plant design with major technological breakthroughs accomplished, and with no major technical, or operational challenges. The facility requires a construction time of less than 24 months. During its startup period of 6 months, the facility achieves 50% of its operating capacity but spends 75% of variable expenses and 100% of fixed expenses. The facility availability is 90% or about 7900 hours of the year, which allows time for scheduled maintenance and unexpected downtime.

Capital Costs

This study employs Aspen Process Economic Analyzer™ (APEA) to estimate equipment-purchasing costs based on the mass and energy balances determined by Aspen Plus™. Each unit operation in the Aspen Plus™ model is mapped into a defined APEA cost unit. APEA uses established industry conventions and a proprietary database to determine equipment configurations, materials of construction, and size among other engineering parameters. Finally, the capital cost estimate employs Peters and Timmerhaus factors to calculate the installed equipment cost and total project investment as shown in Table 4. This procedure only accounts for the equipment cost of major operating units, and it should be considered a preliminary design with an accuracy of -30/+100%.

Table 4 Cost factors for estimating total project investment costs based on the total purchased equipment cost

Total Purchased Equipment Cost (TPEC)	100%
Purchased Equipment Installation	39%
Instrumentation and Controls	26%
Piping	31%

Electrical Systems	10%
Buildings (including services)	29%
Yard Improvements	12%
Service Facilities	55%
Total Installed Cost (TIC)	3.02
Indirect Costs	
Engineering	32%
Construction	34%
Legal and Contractors Fees	23%
Total Indirect	3.91
Project Contingency	78.2%
(Working Capital shown in DCFROR)	
Total Fixed Capital Investment	4.69
Non-depreciated Direct Costs	
Land	6.00%
Total Investment (with Land)	
Lang Factor	**4.75**

The chemical process model does not include auxiliary equipment necessary for the operation of the facility. These auxiliary units consist primarily of material handling equipment (forklifts, conveyors, etc.). Due to their importance in solid handling facilities, this study relies on data provided by the National Renewable Energy Laboratory (NREL) to estimate their costs based on a similarly sized solid handling facility.

Operating Costs

The primary operating costs for this facility include material, labor, capital, land, overhead, and maintenance. Material costs consist of corn stover and coal purchased for bioproduct and power generation, and the byproducts biochar, bio-oil light ends, and process steam sold at their estimated market value. This study assumes market prices of $83 and $57.3 per Mg for corn stover and coal respectively. Biochar and bio-oil light ends are projected to have values of $22.1 and $21.75 per Mg based on their agronomic and

chemical content value respectively. Market prices for high, medium, and low pressure steams are assumed to be $7.94, $6.62, and $5.29 per Mg based on Peters and Timmerhaus.

Labor costs are based on salary values provided by NREL and adjusted to account for the two separate facilities. Table 5 shows the employee position, salary, and total number employed for the fast pyrolysis and CHP facilities.

Table 5 Employee salaries and number for the combined fast pyrolysis and CHP facilities

Position	Salary	Number
Plant Manager	$80000	2
Plant Engineer	$65000	2
Maintenance Supervisor	$60000	2
Lab Manager	$50000	2
Shift Supervisor	$37000	10
Lab Technician	$25000	3
Maintenance Technician	$28000	16
Shift Operators	$25000	40
Yard Employees	$20000	64
General Manager	$100000	1
Clerks & Secretaries	$20000	5

The equivalent annualized cost of capital is based on a 20-year discounted cash flow rate of return (DCFROR) analysis. In the DCFROR, the cost of capital includes equipment depreciation, loan, tax, and return on investment (ROI) costs.

Equipment depreciation costs are estimated based on a 7-year modified accelerated cost recovery system (MACRS), which employs both double-declining and straight-line depreciation methods to maximize the economic return. We assume a negligible salvage value for the facilities. Loan interest rates are assumed to be 7.5% with a 10-year term, but

we assume the facility is financed by 100% equity. The income tax rate is 39%, and the internal rate of return is 10%.

Life Cycle Analysis

The life cycle analysis (LCA) employed the latest version of Argonne National Laboratory's Greenhouse Gases, Regulated Emissions, and Energy Use in Transportation Model (GREET v2013) to estimate the well-to-plant (WTP) emissions of various scenarios. The base case scenario consists of electricity generation via bio-oil co-firing fuel (BCF) with coal in a combined heat and power (CHP) plant. This scenario was later compared to biomass- and coal- only options for power generation.

The system boundaries for the LCA include various processes shown in Figure 2. These processes consist of feedstock collection, transportation, conversion, and transmission of electricity. For biomass power, upstream processes include feedstock cultivation and harvesting; coal pathways include coal mining and collection steps. The output products considered are electricity, biochar (sequestered), and aqueous phase bio-oil.

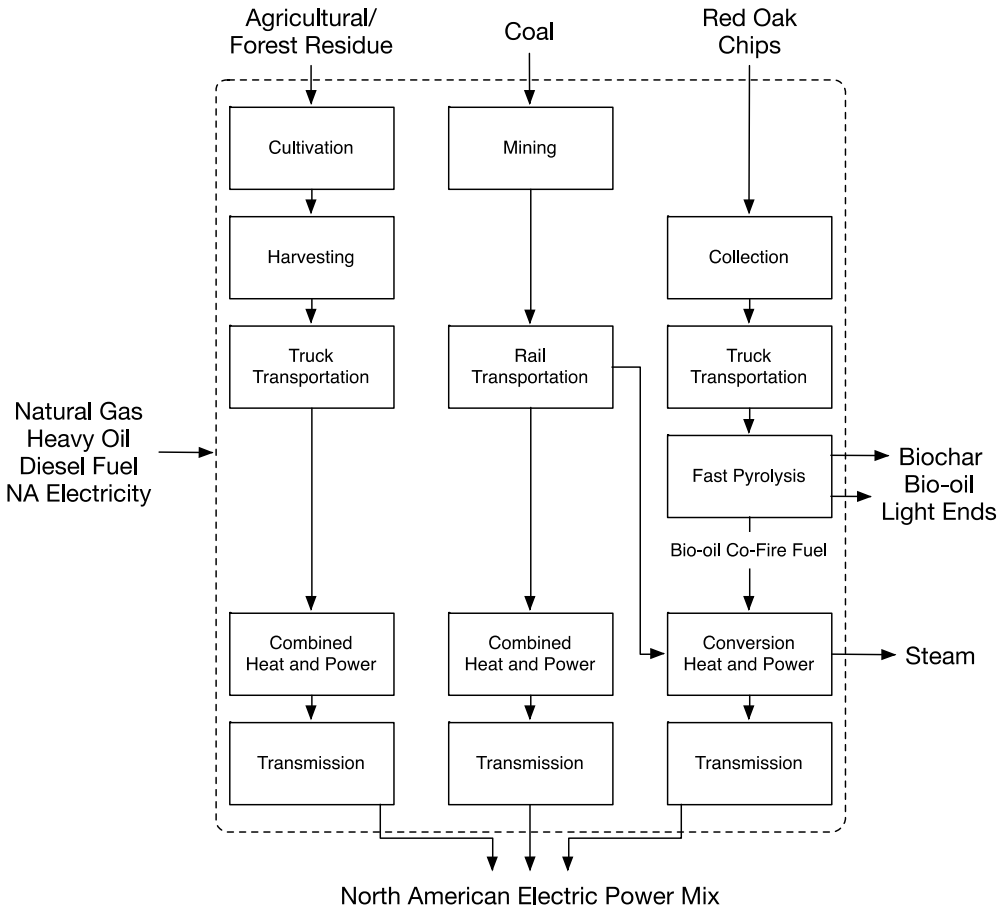

Figure 2 Life-Cycle Assessment system boundaries, process, and key material and energy flows

Greenhouse Gas Inventory Data

The following table lists greenhouse gas inventory data for the primary materials and technologies employed in the LCA. The base case scenario employs red oak as the primary renewable energy input, which is modeled based on forest residue GREET data and the compositional data described above. Coal GHG data is based on the North American mix… Other important inputs include natural gas, diesel fuel, and electricity. GREET includes assumptions for the output materials electricity and biochar. The carbon and sulfur ratios for red oak and biochar were modified to fit the experimental data available.

Life Cycle Emissions	Red Oak Chips	Forest Residue	Coal	Corn Stover

VOC	1.405 g	1.693 g	7.630 g	4.860 g
CO	6.605 g	7.469 g	2.589 g	9.430 g
NOx	13.215 g	15.779 g	12.769 g	24.389 g
PM10	1.233 g	1.430 g	173.730 g	2.446 g
PM2.5	1.047 g	1.182 g	43.348 g	1.634 g
SOx	776.305 mg	1.339 g	7.171 g	12.672 g
CH4	3.266 g	5.555 g	148.348 g	17.703 g
N2O	32.432 mg	67.311 mg	30.811 mg	6.649 g
CO2	2.144 kg	3.648 kg	1.592 kg	5.007 kg
CO2 Biogenic	-707.141 mg	-1.200 g	-3.808 g	-6.503 g
CO2 Land Use Change	0.000 g	0.000 g	0.000 g	0.000 g
CO2 Fertilizer	0.000 g	0.000 g	0.000 g	0.000 g
Groups				
Greenhouse Gas	90.612 g	157.740 g	3.714 kg	2.418 kg

LCA Methodology

The LCA methodology employs GREET to estimate the well-to-pump (WTP) emissions for the proposed system. Figure 3 shows the overall diagram as captured from the GREET modeling software. There are 5 distinct steps modeled, which are corn stover collection, transportation, pyrolysis, coal co-firing, and electricity transmission and distribution. Each of these steps involve the use of energy and the generation of greenhouse gas emissions.

Corn stover collection consumes energy primarily in the form of diesel for non-road engines, and nitrogen, phosphoric acid, and potassium oxide that are removed with the material. The corn stover is then transported in stacks by a heavy-duty truck a distance of 38 miles to the pyrolysis facility.

The pyrolysis facility consumes corn stover, and small amounts of electricity and natural gas. The electricity consists of the U.S. average power generation mixture. The co-products of the pyrolysis facility are biochar and bio-oil light ends. Due to the difficult in comparing these to market equivalent products, this analysis uses a mass allocation method to distribute on-site emissions among the various pyrolysis products. Furthermore, we

assume that biochar soil application behaves as a low-energy carbon sequestration agent. Argonne National Lab recently conducted a detailed study of biochar sequestration strategies.

The bio-oil co-fire fuel and coal are fed into a utility boiler combined heat and power system. Coal delivery is modeled as the coal for power plant single pathway, which incorporates the average LCA impact of U.S. coal delivered to power plants. The mass input ratio is 70/30 coal to biomass, which corresponds to 86.6/14.4 on an energy basis. The combined thermal efficiency of converting coal and BCF to electricity is 26.8%. Approximately 16% of on-site emissions are considered to be urban emissions.

The final step in the LCA system is the electric transmission and distribution to the U.S. grid. The assumed efficiency for electricity transmission is 93.5%.

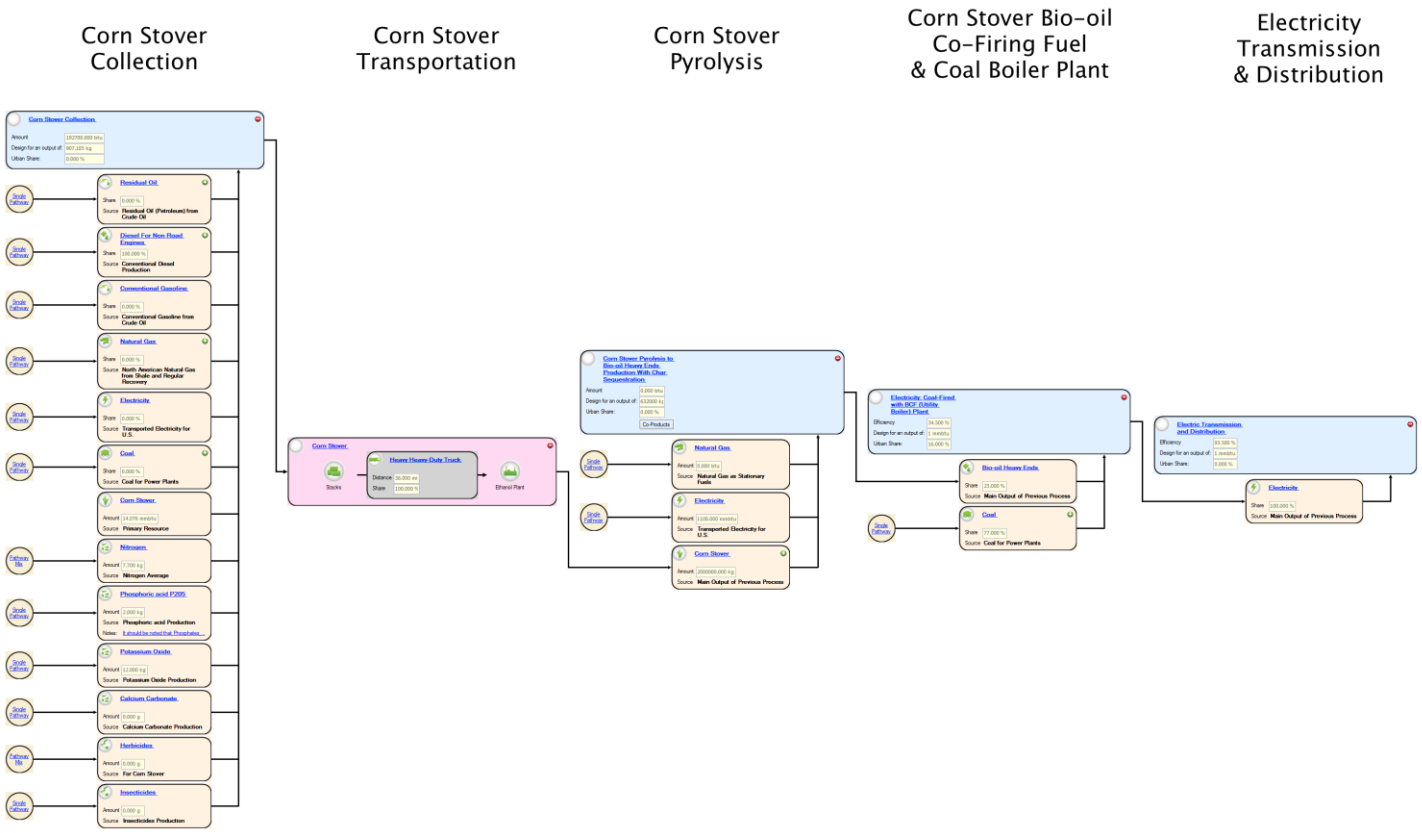

Figure 3 Corn stover fast pyrolysis and coal-bio-oil co-fire fuel combined heat and power production well-to-pump diagram

Incentive Value Analysis

At the onset of this project, there were indications that the EPA would consider Renewable Identification Numbers (RINs) for the use of renewable biomass in power production particularly for end use in battery-powered electric vehicles (BEV). RIN values have proven useful in incentivizing the production of renewable fuels for the transportation market. However, current guidance is that the EPA will not accept RIN values for power generation. Nonetheless, there are other potential incentive avenues to consider for this project.

Several coal power facilities have struggled to meet new regulations that require strict caps in the emissions of power generating facilities. While this has been widely considered an opportunity for growing the use of carbon capture and sequestration (CCS) technology, CCS suffers from high capital and parasitic energy costs. The lack of viable alternatives has already led to lower power contributions from coal facilities at the expense of natural gas which achieves lower emissions and higher overall efficiencies. The BCF concept could revitalize closed coal power facilities by providing a lower cost option than CCS for reducing coal power emissions. However, a detailed analysis comparing the cost of BCF to CCS has yet to be done.

Another potential incentive would be the development of a carbon trade market. By virtue of the carbon negative nature of BCF, a carbon trade market could be an important revenue source for a facility utilizing the BCF model. In this study we provide a simple calculation of the required carbon market price to make this system viable.

Results

Techno-Economic Analysis

The process model results indicate that the fast pyrolysis facility converts 2000 Mg per day of corn stover into 632 Mg of bio-oil co-fire fuel (BCF), 895 Mg of light ends, and 158 Mg of biochar with the balance consisting of flue gas and ash. The BCF is subsequently mixed with 1467 Mg of bituminous coal at a 70/30 BCF to coal ratio. A steam boiler, operating at 1100 °C, raises high-pressure (28 bar) steam by combusting the fuel mixture. An economizer employs excess heat from the boiler to preheat process water for steam generation. Combustion gases flow through a series of heat exchanger raising high-, medium- (11 bar), and low- (2 bar) pressure steam. Steam turbines expand a majority of the steam to produce electric power. In summary, 121, 40, and 15843 Mg per day of high-, medium-, and low-pressure steam are generated, and 82.9 MWe is exported as summarized in Table 6. Figure 5 shows a simplified process flow diagram of the corn stover fast pyrolysis and BCF-Coal combined heat and power system.

Table 6 Corn stover fast pyrolysis and BCF-Coal power production key material flows

Material	Tonnes per day	Price ($/MT)	Energy Content (HHV - MJ/kg)
Corn Stover	2000	83	18.0
Coal	1467	57.3	29.5
Biochar	158	-22.1	13.83
Light Ends	895	-21.75	4.28
Steam (2 bar)	15843	-5.29	
Steam (11 bar)	40	-6.62	
Steam (28 bar)	121	-7.94	

Figure 4 describes the overall energy outputs as fractions of the coal and corn stover inputs to the fast pyrolysis and combined heat and power systems. As shown, a majority of the input energy becomes steam at various pressure levels. The LP steam contribution is small because of the amount of heat sent to the economizer. The process was designed for high electricity production relative to high-pressure steam generation on the basis that most of the steam will be for residential uses (hot water). Fast pyrolysis products contain a small fraction of the overall energy in part because of the high energy input of coal to the CHP system. Furthermore, a significant portion of the biochar is consumed in the HRSG system (about 1/3). Most of the energy losses occur in the HRSG and CHP boilers, and other energy losses include sensible heat in flue gas streams, and stranded heat in miscellaneous process units.

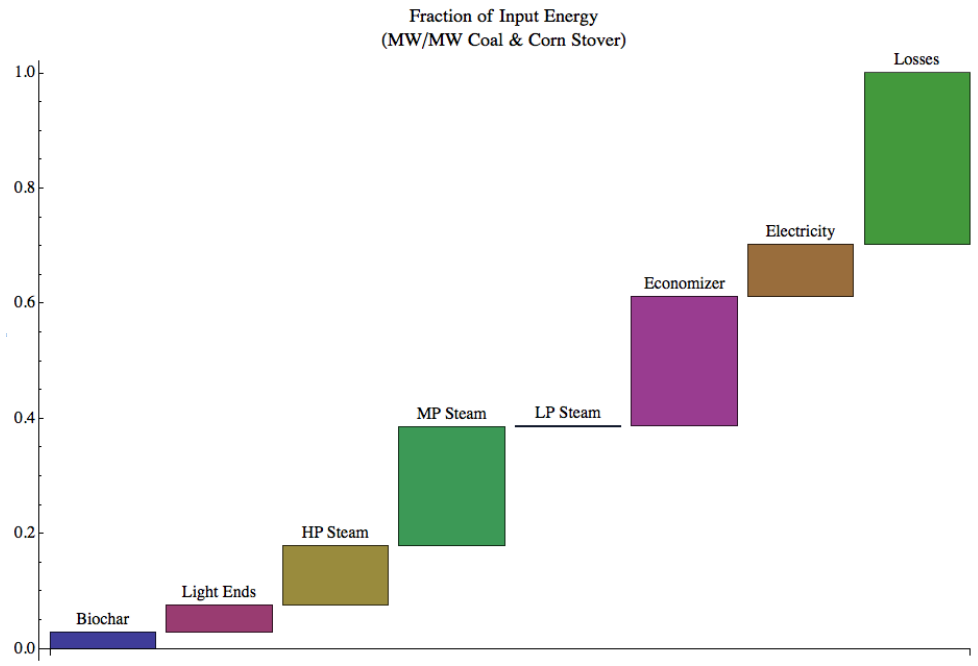

Figure 4 Energy balance of the corn stover fast pyrolysis and BCF-Coal combined heat and power system

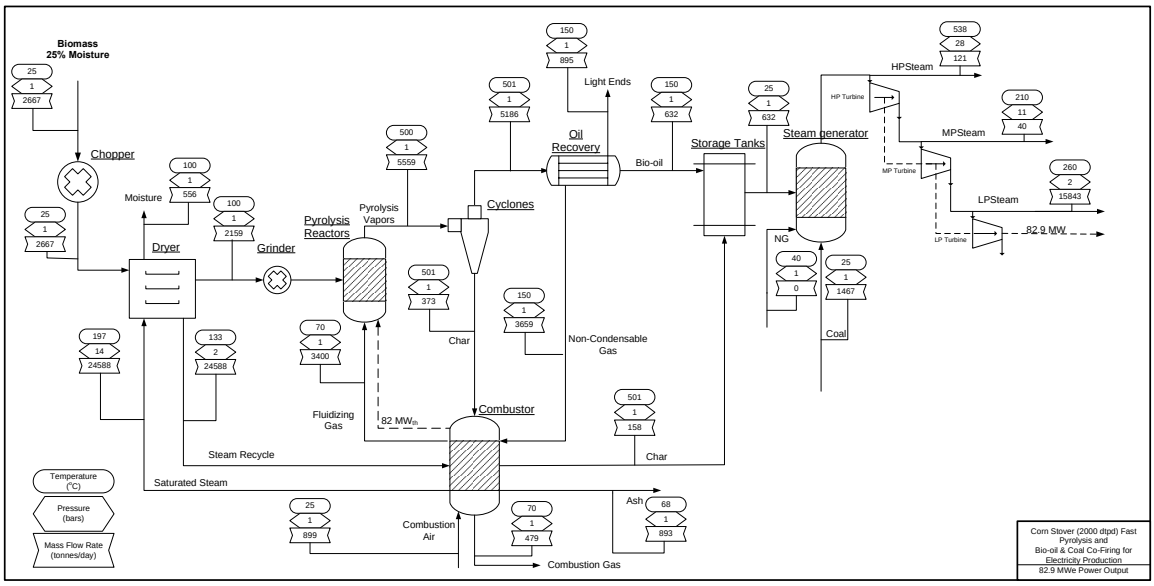

Figure 5 Simplified process flow diagram of corn stover fast pyrolysis and combined steam and power production from bio-oil co-fire fuel and coal

The equipment cost estimate includes over 100 major processing units with a total purchased cost of $45.5 MM. The total project investment cost is $216 MM. The fixed capital cost represents a $2574/kW of capacity investment, which compares to $1200/kW for a turnkey installation based on EPA estimates. The total fixed capital cost are grouped by process area and summarized in Figure 6. The combined heat and power (CHP) process has the highest capital cost contribution at 35.0% followed by pretreatment (32.2%) and heat recovery steam generation (HRSG) at 21.5%. Product storage costs are small and only account for the small quantity of biochar and light ends generated.

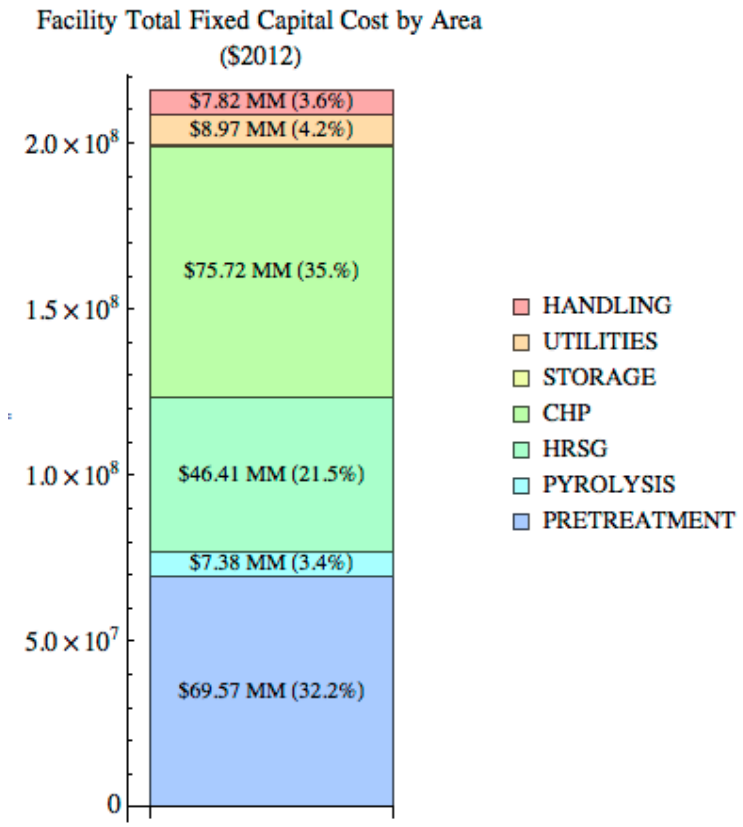

Figure 6 Corn stover fast pyrolysis and BCF-Coal power production fixed capital costs by process area

Corn stover contributes the majority of the total operating cost with an adjusted value of 60%. Coal costs come second with a 30.4% contribution. Coal costs are almost completely offset by the sale of low-pressure steam, which generates $27.59 MM per year compared to the $27.67 MM coal cost per year. Bio-oil light ends and biochar generate revenues of about 7.5% the total operating cost. Figure 7 shows all the major operating costs by category.

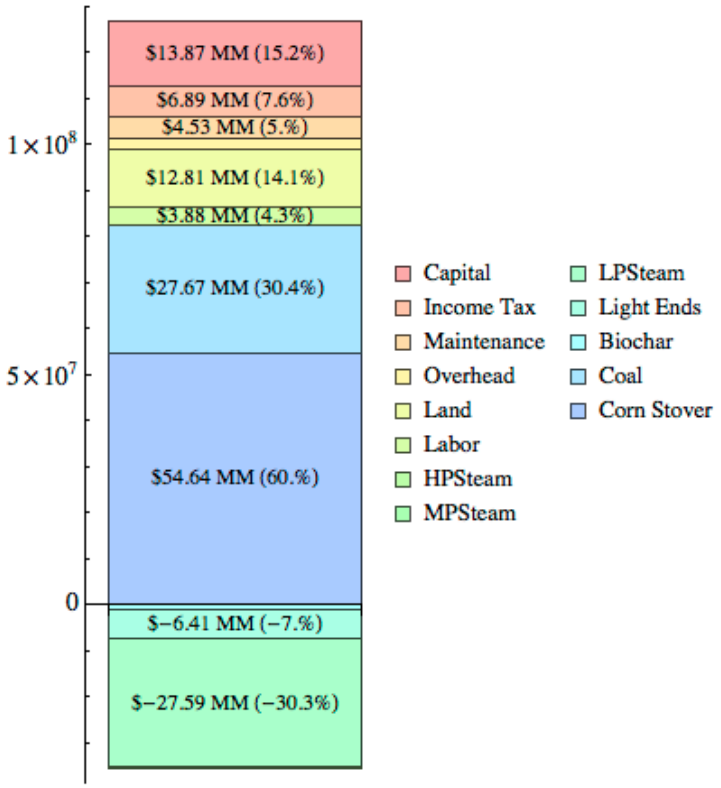

Figure 7 Corn stover fast pyrolysis and BCF-Coal power production operating costs

In order to achieve a 10% internal rate of return, this facility would need to sell electricity at a cost of 15.2 cents per kWhr. This estimate compares to an average 2013 electricity price of 9.74 cents per kWhr for all sectors in the U.S. The highest electricity prices are for the residential sector where it cost 12.03 cents per kWhr in 2013. Figure 8 compares this project's electricity cost estimate to those of different U.S. sectors.

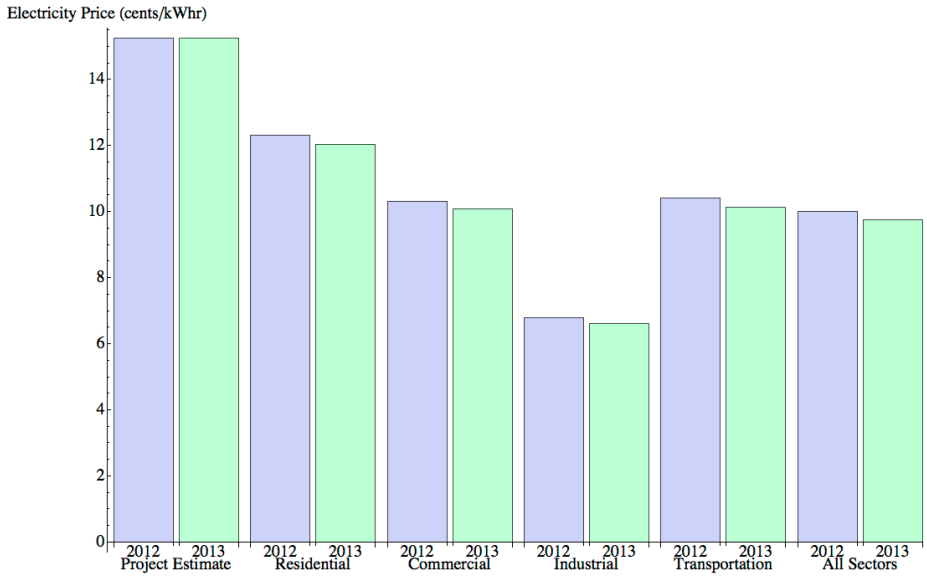

Figure 8 Electricity price comparison for various U.S. sectors (Source: EIA http://www.eia.gov/electricity/monthly/epm_table_grapher.cfm?t=epmt_5_6_a)

These results indicate a higher than market price cost of using BCF and coal to generate electricity. However, the difference of 5 cents per kWhr could be overcome depending on numerous factors. For example, lower feedstock cost, higher byproduct revenue, and improved overall efficiency are potential avenues to lower these production costs. On the other hand, the uncertainty of the capital cost estimate and the current state of technology suggest that more research is needed to better understand the commercialization potential of this technology.

Life Cycle Assessment

The results of the LCA are summarized in Table 7 and compared to other pathways for electricity production using biomass or coal in utility boilers. The proposed pathway in this study achieves a net greenhouse gas reduction of 13.124 kg of CO_2 equivalent per million btu (mmbtu) of power generated. This reduction in GHG emissions is much less than using forest residue alone (23.976 kg CO_{2e}/mmbtu) but is a significant improvement compared to

net emissions of 329.017 kg CO_{2e}/mmbtu for coal power generation. Furthermore, we expect much lower NOx and SOx emissions by virtue of the lower Nitrogen and Sulfur contents in biomass. An important note is the lack of land use change and fertilizer emissions due to the use of non-food crops and absence of fertilizer use (the corn stover scenario allocates fertilizer use to corn production).

Table 7 Life cycle well-to-pump greenhouse gas emissions of several utility boiler power production pathways in kg per mmbtu of electricity generated.

	Farmed Trees	Forest Residue	Herbaceous	Coal	Coal + BCF
VOC	0.050	0.050	0.067	0.028	0.015
CO	1.522	1.522	1.540	0.048	0.125
NO_x	0.366	0.374	0.426	0.403	0.229
PM10	0.888	0.888	0.892	0.117	0.088
PM2.5	0.625	0.625	0.628	0.068	0.070
SOx	0.013	0.005	0.732	1.031	0.464
CH_4	0.172	0.172	0.202	0.462	0.184
N_2O	0.026	0.021	0.104	0.005	0.008
CO_2	508.784	645.141	543.584	315.813	158.805
$CO_{2,Biogenic}$	(499.597)	(634.173)	(524.010)	(0.011)	(46.701)
Net GHG	**23.719**	**23.976**	**58.107**	**329.017**	**119.225**

Incentive Value Analysis

This study estimates the required minimum carbon price to support the proposed BCF system when compared to conventional coal power generation technology. At an estimated cost of 15.2 cents/kWhr, the BCF concept is 5.46 cents/kWhr more expensive than the average electricity price in the U.S. However, its net GHG emissions are 63.7% lower than conventional coal power production. BCF would be cost-competitive with coal power production at a carbon market price of \$76.27/Mg of CO_{2eq}.

This carbon market price is higher than those seen in established carbon markets around the world. This result suggests that BCF could be one of the initial avenues to utilizing biomass as a carbon emission reduction agent if there is viable carbon market. Further research would be required to compare the BCF concept to other carbon mitigation strategies.

Discussion

This project studied the economic cost and environment impact of generating electricity from corn stover and coal by mixing "heavy-ends" of bio-oil derived from the pyrolysis of corn stover and bituminous coal in a combined heat and power (CHP) system. The results of this analysis include an estimate for the minimum electricity-selling price (MESP) required for commercial viability of this technology, and the environmental impact of the electricity generated.

The results of the techno-economic analysis include estimates of the capital and operating costs of BCF production and conversion to power. The total project investment is $216 MM, and the CHP process contributes the most to the capital cost at 35.0%. Corn stover contributes the most (about 60%) to operating costs followed by coal expenses (30.4%). The greenfield BCF system has a total electricity price of 15.2 cents per kWhr for a 10% rate of return. This price is about 5 cents per kWhr higher than the average market electricity price. However, there are a large number of factors affecting the estimated price that need to be optimized.

The net greenhouse gas emissions of the co-firing system are estimated at 119 kg of $CO_{2,e}$ per mmbtu of electricity. This emission rate is much higher than a dedicated forest residue power system (23.976 kg CO_{2e}/mmbtu). However, the BCF system achieves a 63.7%

reduction when compared to the 329 kg CO_{2e}/mmbtu emission for a coal power plant. This level of emission reduction would allow existing coal power plants to meet new limits on carbon emissions. The other advantage is that BCF has a lower nitrogen and sulfur content, which leads to reductions in NOx and SOx emissions.

Considering the reduction of GHG emissions with the minimum electricity-selling price, bio-oil co-firing fuel (BCF) could be competitive with coal for power production. An incentive of $76.27/Mg of CO_{2e} could be required to level the cost compared to the industry average. However, future research could help describe strategies to reducing the cost of BCF power production.

Acknowledgements

The authors of this project would like to acknowledge the financial support of the Iowa Energy Center. We would also like to acknowledge the contributions of Wenqin Li and Emily Hansen in the TEA and report preparation.

Appendix

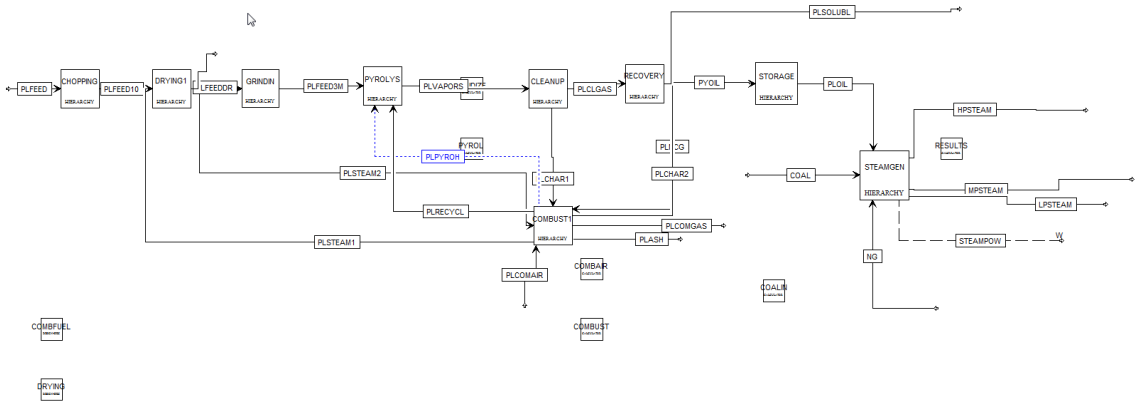

Figure 9 Aspen Plus Overall Process Flow Diagram

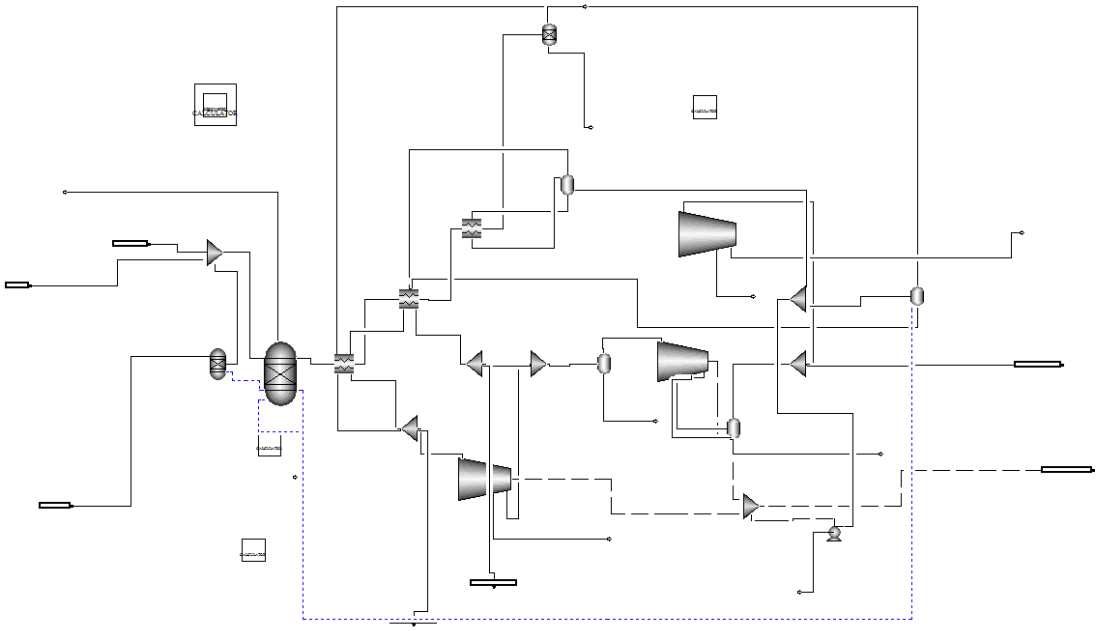

Figure 10 Aspen Plus CHP Process Flow Diagram (material flow data available upon request)

Table 8 Equipment Installed and Purchased Costs

Component Name	Component Type	Total Installed Cost	Equipment Cost
PRETREATMENT.CHCRUSH	ECR JAW	1,172,400.00	975,700.00
PRETREATMENT.CHMIXER	C	0	0
PRETREATMENT.CHSCREEN	EVS ONE DECK	61,600.00	48,900.00
PYROLYSIS.CLCYCL02	DVT CYLINDER	763,800.00	238,200.00
HRSG.CBCOMB	DAT REACTOR	353,400.00	126,900.00
HRSG.CBCOMP2	DGC CENTRIF	3,264,500.00	2,770,500.00
HRSG.CBQMIXER	C	0	0
HRSG.CBSPLIT1	DVT CYLINDER	202,500.00	31,200.00
HRSG.CBSPLIT2	C	0	0
HRSG.CBSTHX01	DHE TEMA EXCH	8,825,800.00	4,398,900.00
HRSG.CBSTHX02	DHE TEMA EXCH	3,471,900.00	2,273,000.00
HRSG.CBSTPUMP	DCP CENTRIF	236,100.00	75,000.00
HRSG.CLCYCL02	DVT CYLINDER	332,000.00	91,900.00
PRETREATMENT.DRACID	C	0	0
PRETREATMENT.DRFLASH-flash vessel	DVT CYLINDER	129,100.00	16,800.00
PRETREATMENT.DRHX2	DHE TEMA EXCH	626,200.00	93,500.00
PRETREATMENT.DRMIX	C	0	0
PRETREATMENT.DRQSPLIT	C	0	0
PRETREATMENT.GRCRUSH	ECR JAW	916,900.00	789,800.00
PRETREATMENT.GRMX	C	0.00	0.00
PRETREATMENT.GRSCREEN	EVS ONE DECK	61,600.00	48,900.00
PYROLYSIS.PYFLBED	DAT REACTOR	1,036,100.00	721,300.00
PYROLYSIS.CONDENSE	DVT CYLINDER	387,100.00	101,500.00
PYROLYSIS.REHX1	DHE TEMA EXCH	255,000.00	65,500.00
PYROLYSIS.SEP	DVT CYLINDER	329,300.00	91,100.00
CHP.STCYC1	DVT CYLINDER	2,358,200.00	428,800.00
CHP.STFL1-flash vessel	DVT CYLINDER	922,900.00	423,700.00
CHP.STFL2-flash vessel	DVT CYLINDER	947,400.00	315,500.00
CHP.STFL3-flash vessel	DVT CYLINDER	1,022,100.00	432,500.00
CHP.STFL4-flash vessel	DVT CYLINDER	336,200.00	133,100.00
CHP.STFS1	C	0.00	0.00
CHP.STFS2	C	0	0
CHP.STFS3	C	0	0
CHP.STFSTANK	C	0	0
CHP.STFURN01	DAT REACTOR	312,900.00	146,800.00
CHP.STH1	DHE TEMA EXCH	473,000.00	273,100.00
CHP.STH2	DHE TEMA EXCH	1,545,400.00	1,014,600.00
CHP.STH3	DHE TEMA EXCH	1,277,200.00	17,100.00

CHP.STMIX	C	0.00	0.00
CHP.STMX1	C	0	0
CHP.STPUMP1	DCP CENTRIF	416,700.00	258,700.00
CHP.STTBLP	DTURTURBOEXP	278,800.00	88,700.00
CHP.STWMIX	C	0.00	0.00
CHP.STYIELD	DAT REACTOR	291,800.00	133,100.00
STORAGE.STCHARST	DHE TEMA EXCH	143,800.00	23,000.00
STORAGE.STPUMP	DCP CENTRIF	51,900.00	6,000.00
STORAGE.STSTORAG	DHE TEMA EXCH	114,700.00	36,000.00
PYROLYSIS.PYHX01	DHE TEMA EXCH	366,600.00	335,400.00
CHP.STTBMP	ETURNON COND	9,576,300.00	8,390,400.00
CHP.STTBHP	ETURNON COND	4,456,100.00	3,877,300.00
PRETREATMENT.DRSTBLOW	EFN CENT TURBO	18,966,200.00	12,667,500.00
UTILITIES.COOLINGTOWER	ECTWCOOLING WP	$3,005,100	$1,888,500
HANDLING.Bale Transport Conveyor	C	$533,000	$533,000
HANDLING.Bale Unwrapping Conveyor	C	$200,000	$200,000
HANDLING.Discharge Conveyor	C	$67,000	$67,000
HANDLING.Truck Scales	C	$45,000	$45,000
HANDLING.Truck Unloading Forklift	C	$24,000	$24,000
HANDLING.Bale Moving Forklift	C	$24,000	$24,000
HANDLING.Concrete Storage Slab	C	$600,000	$600,000
HANDLING.Belt Press	C	$133,000	$133,000
HANDLING.Magnetic Separator	C	$19,000	$19,000

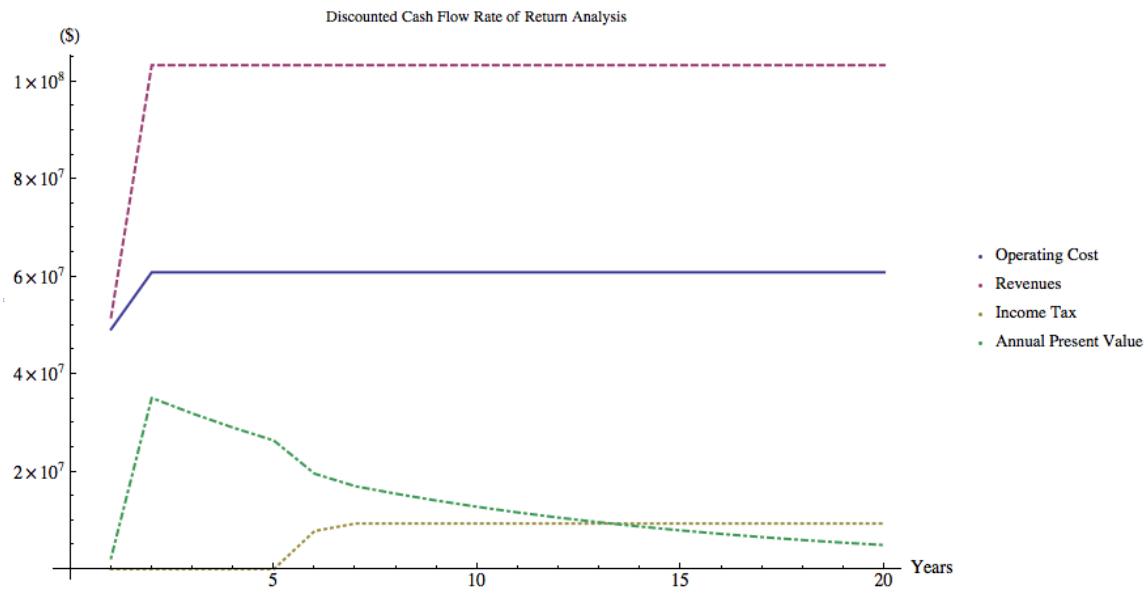

Figure 11 Discounted Cash Flow Rate of Return Analysis annual results

	Farmed Trees		Forest Residue		Herbaceous	Coal Power	Corn Stover + BCF
Emissions							
Life Cycle							
Emissions							
VOC	34.985 g	48.197 g	46.326 g	27.821 g	36.577 g		
CO	424.022 g	1.410 kg	425.720 g	42.255 g	48.736 g		
NOx	627.843 g	652.859 g	644.204 g	473.486 g	129.252 g		
PM10	71.934 g	782.189 g	71.685 g	585.715 g	623.757 g		
PM2.5	37.541 g	706.941 g	36.915 g	171.431 g	158.996 g		
SOx	11.071 g	6.883 g	12.603 g	1.256 kg	80.250 g		
CH4	43.789 g	188.736 g	84.463 g	463.367 g	568.287 g		
N2O	61.646 g	22.601 g	111.327 g	5.236 g	14.206 g		
CO2	12.633 kg	683.743 kg	14.764 kg	315.238 kg	33.876 kg		

CO2C	0.000 g	0.000 g	0.000 g	0.000 g	0.000 g
CO2Biogenic	-526.018 kg	-667.712 kg	-492.411 kg	-11.804 g	-31.565 kg
CO2LandUseChange	0.000 g	0.000 g	0.000 g	0.000 g	0.000 g
CO2Fertilizer	0.000 g	0.000 g	0.000 g	0.000 g	0.000 g
Groups					
Greenhouse Gas	-506.553 kg	-656.259 kg	-457.124 kg	13.133 kg	-13.124 kg
OnSite					
Resources					
Life Cycle					
Resources	5.306 mmbtu	5.381 mmbtu	5.356 mmbtu	3.163 mmbtu	5.372 mmbtu
Farmed Trees	5.142 mmbtu	5.142 mmbtu	5.142 mmbtu	3.110 mmbtu	3.557 mmbtu
Crude Oil	117257.645 btu	196524.410 btu	112943.660 btu	39476.534 btu	1.607 mmbtu
Natural Gas	25473.945 btu	22129.836 btu	79238.918 btu	7632.033 btu	90285.326 btu
Bituminous Oil	10194.240 btu	17085.597 btu	12294.604 btu	3432.043 btu	87605.564 btu
Coal	8894.494 btu	2858.266 btu	6888.937 btu	1225.244 btu	14951.516 btu
Nuclear Energy	1332.105 btu	399.322 btu	1856.330 btu	397.915 btu	7849.298 btu
Hydroelectric Power	434.540 btu	134.432 btu	603.371 btu	146.399 btu	4845.593 btu
Wind Power	160.844 btu	51.857 btu	222.243 btu	90.903 btu	1777.658 btu
Forest Residue	106.080 btu	7.733 btu	139.618 btu	23.664 btu	1071.104 btu
GeoThermal Power	25.736 btu	7.733 btu	35.855 btu	23.664 btu	288.729 btu
Renewable (Solar, Hydro, Wind, GeoThermal)	25.736 btu	0.580 btu	35.855 btu	1.775 btu	288.729 btu
Solar	1.930 btu	3.991 mg	2.689 btu	12.245 mg	21.655 btu
Uranium Ore	13.313 mg	0.000 btu	18.552 mg	0.000 btu	149.421 mg
Herbaceous Biomass (Switchgrass)	0.000 btu	0.000 btu	0.000 btu	0.000 btu	0.000 btu
Groups					0.000 btu
Non Fossil Fuel	5.144 mmbtu	5.143 mmbtu	5.145 mmbtu	3.161 mmbtu	
Renewable	5.143	5.142	5.143	3.110	3.742

	mmbtu	mmbtu	mmbtu	mmbtu	mmbtu
Biomass	5.142 mmbtu	5.142 mmbtu	5.142 mmbtu	42908.577 btu	3.557 mmbtu
Fossil Fuel	161820.323 btu	238598.109 btu	211366.118 btu	7632.033 btu	1.630 mmbtu
Petroleum Fuel	127451.885 btu	213610.007 btu	112943.660 btu	1909.563 btu	1.615 mmbtu
Natural Gas Fuel	25473.945 btu	22129.836 btu	86127.854 btu	1225.244 btu	1.608 mmbtu
Coal Fuel	8894.494 btu	2858.266 btu	12294.604 btu	684.319 btu	98134.625 btu
Nuclear	1332.105 btu	399.322 btu	1856.330 btu	90.903 btu	87605.564 btu
OnSite					14951.516 btu
Resources	1.070 mmbtu	1.070 mmbtu	1.070 mmbtu	1.070 mmbtu	
Electricity	1.070 mmbtu	1.070 mmbtu	1.070 mmbtu	1.070 mmbtu	1.070 mmbtu
Groups					1.070 mmbtu
Grid Connected Vehicle (PHEV)	1.070 mmbtu	1.070 mmbtu	1.070 mmbtu	1.070 mmbtu	
Urban Emissions					1.070 mmbtu
Life Cycle					
Emissions					
VOC	234.889 mg	396.940 mg	177.214 mg	856.385 mg	
CO	473.623 mg	776.701 mg	388.476 mg	5.990 g	348.126 mg
NOx	1.439 g	2.138 g	1.389 g	72.175 g	1.161 g
PM10	220.814 mg	339.553 mg	178.259 mg	7.689 g	6.240 g
PM2.5	140.041 mg	209.381 mg	119.988 mg	6.045 g	493.592 mg
SOx	1.303 g	1.372 g	1.389 g	198.286 g	382.375 mg
CH4	340.081 mg	485.352 mg	614.344 mg	674.414 mg	7.177 g
N2O	16.813 mg	27.346 mg	13.776 mg	831.344 mg	574.514 mg
CO2	1.082 kg	1.602 kg	917.565 g	50.210 kg	41.465 mg
CO2C	0.000 g	0.000 g	0.000 g	0.000 g	3.315 kg

CO2Biogenic	0.000 g	0.000 g	0.000 g	0.000 g	0.000 g
CO2LandUseChange	0.000 g	0.000 g	0.000 g	0.000 g	0.000 g
CO2Fertilizer	0.000 g	0.000 g	0.000 g	0.000 g	0.000 g
Groups					0.000 g
Greenhouse Gas	13.512 g	20.283 g	19.464 g	264.601 g	
OnSite					26.719 g

Figure 12 Life Cycle Analysis comparison of power generation from various feedstock